SPEAKMAN CASPIAN™

Shower Combination SM-7050-P and SM-7040-P

SPECIFICATION

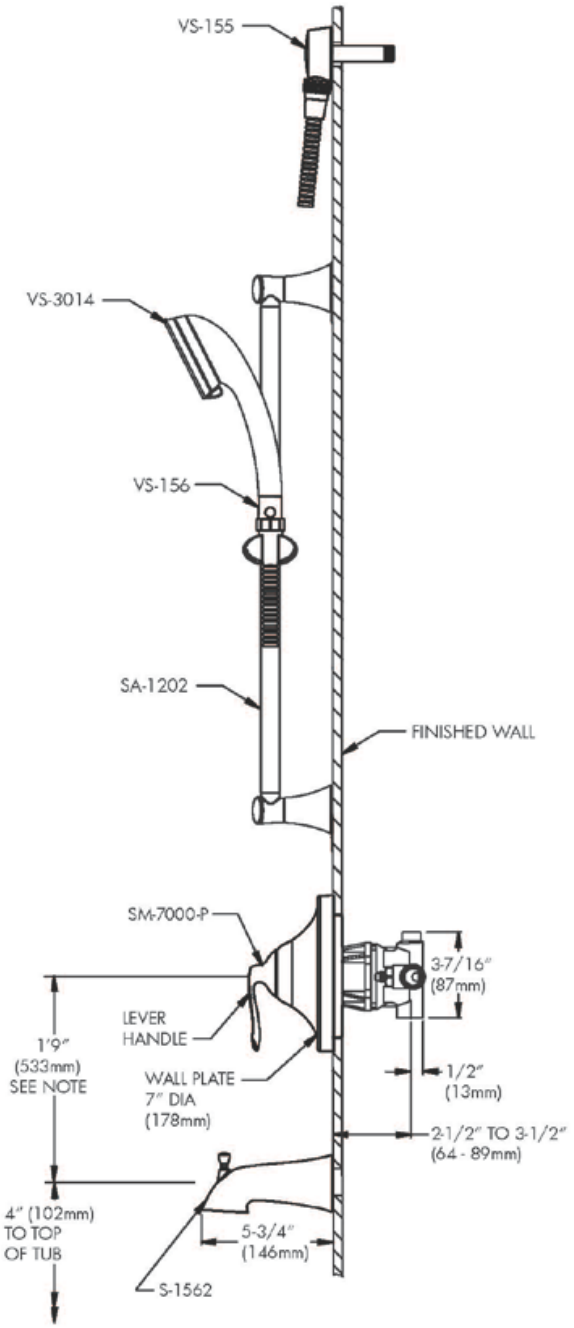

FEATURES:

- Contemporary style
- SM-7000-P pressure balance shower valve & trim
- VS-3014 hand shower
- VS-155 elbow
- VS-156 pause/trickle adapter
- SA-1202 slide bar

❑ SM-7050-P with S-1562 diverter tub spout with slip-fit connection

❑ SM-7040-P without S-1562 diverter tub spout

COMPLIANCE:

- Certified to ASME A112.18.1/CSA B125.1 and ASSE 1016 standards

AVAILABLE FINISHES:

ADD SUFFIX TO MODEL #

- Polished Chrome (standard)
- Brushed Nickel ❑ -BN
- Polished Nickel ❑ -PN

WARRANTY:

- 1 year limited

NOTE: 1. All dimensions are in inches (millimeters) unless otherwise specified and are subject to change without notice. 2. For ADA mounting locations, consult ADAAG, ANSI A117.1, or static regulations

THIS SPACE FOR ARCHITECT/ENGINEER APPROVAL.

SPEAKMAN®

400 ANCHOR MILL ROAD | NEW CASTLE, DE 19720
P: 800-537-2107 | F: 800-977-2747
WWW.SPEAKMANCOMPANY.COM

REVISION DATE: FEB. 2012