SPEAKMAN®

SE-624

SAFE-T-ZONE® EMERGENCY SHOWER AND EYEWASH

DESCRIPTION

Floor mounted emergency deluge shower and aerated eyewash combination unit. Shower is supplied with a 1" NPTF stay-open full flow ball valve, activated by triangular pull handle. Eyewash is supplied with 1/2" NPTF stay-open full flow ball valve, activated by push handle.

SPECIFICATIONS

Showerhead: 8" Dia. stainless steel
FLow Control: Internal 20 gpm Regulator
Valve: 1" NPT Female Stainless Steel. Full Flow Stay-Open Ball Valve
Activator: Stainless Steel Tube
Stanchion: 1-1/2" Stainless Steel, 18 Gauge Tubing
Inlet & Waste: 1-1/4" NPT Male
Floor Flange: Stainless Steel With (4) 7/16" Dia. Mounting Holes On 4" Centers
Finish: Stainless Steel
Shower Performance: 20 gpm @ 30 psi

EYEWASH: SE-506
Bowl: Acrylic/PVC thermoplastic
Spray Heads: (2) yellow, plastic, aerated
Valve: ½" NPT female brass, chrome-plated
Activator: Stainless steel push handle
Inlet: ½" NPT female
Performance: 3.0 gpm @ 30 psi
Compliance: ANSI Z358.1
Universal Emergency Sign Included

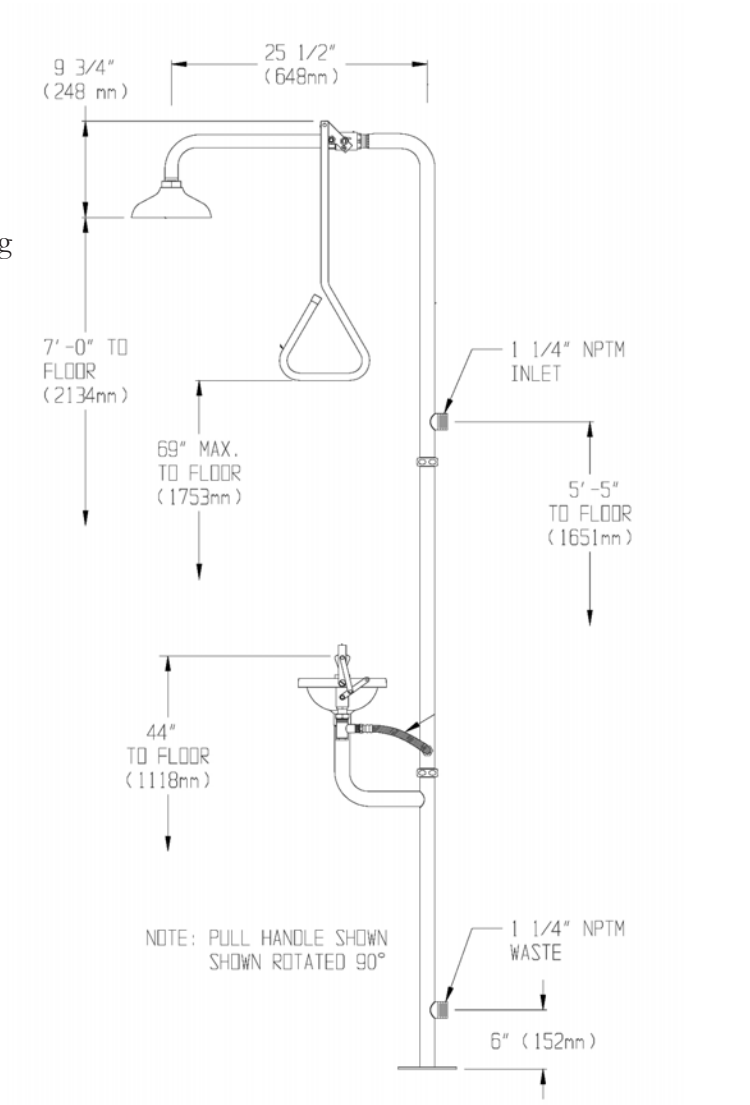

OPTIONS

- ❑ FLW Flow switch
- ❑ HS Hand-held spray
- ❑ XCH Extended chain
- ❑ PC Polished chrome showerhead
- ❑ BH Brass showerhead
- ❑ SSH Stainless steel showerhead
- ❑ FPV Anti-freeze protection valve
- ❑ SPV Anti-scald protection valve
- ❑ TS Top supply
- ❑ VPL Vapor proof light

Job Name_____
Location_____
Architect/Engineer _____
Sales Representative _____
Wholesaler _____
Date_____ Model # _____

400 Anchor Mill Road, New Castle, DE 19720 USA
1-800-537-2107 | Fax: 1-800-977-2747
WWW.SPEAKMANCOMPANY.COM

Revision Date
AUG. 2011