SPEAKMAN®

SE-602

SAFE-T-ZONE® EMERGENCY SHOWER AND EYE/FACE WASH

DESCRIPTION

Floor mounted emergency deluge shower and aerated eye/face wash combination unit. Shower is supplied with a 1" NPTF self-closing valve, activated by a pull chain and ring. Eye/face wash is supplied with 1/2" NPTF stay-open full flow ball valve, activated by push handle.

SPECIFICATIONS

Showerhead: 8" Dia. Cycolac® Yellow Plastic.
Flow Control: Internal 20 gpm Regulator.
Valve: 1" NPT Female Brass, Chrome-Plated. Self-Closing Valve.
Activator: 8" Stainless Steel Ring.
Stanchion: 1-1/4" IPS Steel Piping with Brass Fittings.
Inlet & Waste: 1-1/4" NPT Female.
Floor Flange: Brass Casting with (3) 17/32" Dia. Mounting Holes on 9" Dia. Bolt Circle, Spaced 120° apart.
Finish: DuraJade™
Shower Performance: 20 gpm @ 30 psi

EYEWASH: SE-401
Bowl: Acrylic/pvc thermoplastic.
Spray Heads: (6) brass, chrome-plated aerated.
Valve: ½" NPT female brass, chrome-plated.
Activator: Stainless steel push handle.
Shrouds: Yellow polypropylene.
Inlet: ½" NPT female.
Strainer: Brass, chrome-plated in-line.
Performance: 9.3 gpm @ 30 psi
Compliance: ANSI Z358.1
Universal Emergency Sign Included

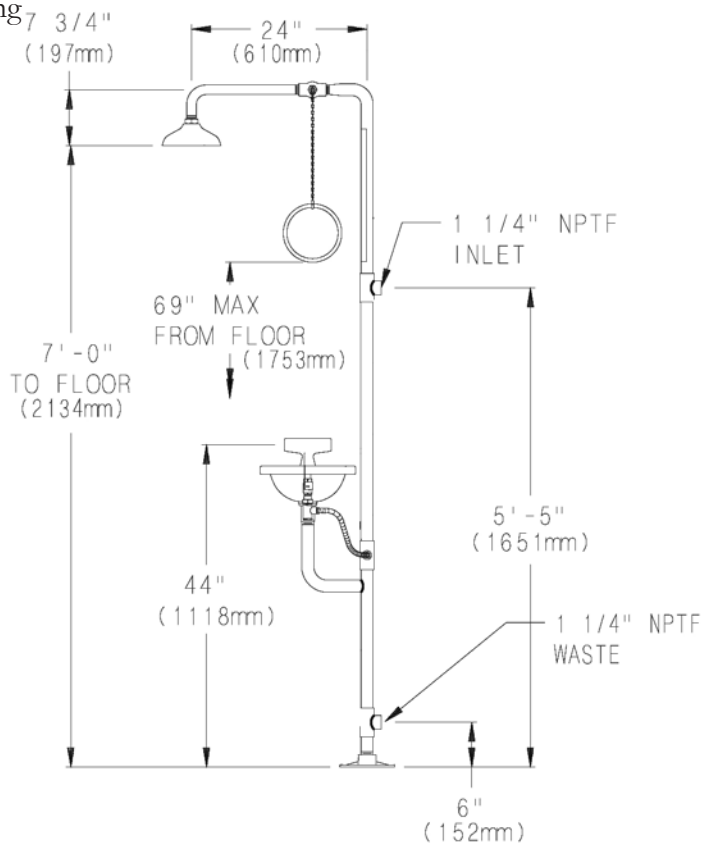

OPTIONS

- ❑ FLW Flow switch
- ❑ HS Hand-held spray
- ❑ XCH Extended chain
- ❑ PC Polished chrome showerhead
- ❑ BH Brass showerhead
- ❑ SSH Stainless steel showerhead
- ❑ FPV Anti-freeze protection valve
- ❑ SPV Anti-scald protection valve
- ❑ TS Top supply
- ❑ VPL Vapor proof light

Job Name_____
Location_____
Architect/Engineer _____
Sales Representative _____
Wholesaler _____
Date_____ Model # _____

400 Anchor Mill Road, New Castle, DE 19720 USA
1-800-537-2107 | Fax: 1-800-977-2747
WWW.SPEAKMANCOMPANY.COM

Revision Date
AUG. 2011