SPEAKMAN®

SE-568

EYESAVER® EYEWASH

DESCRIPTION

The SE-568 Eyesaver® wall mounted barrier free eyewash features a stainless steel bowl with a wrap around stainless steel skirt to hide the supply piping and provide an architectural finish to the unit. Additional features include dual aerated spray heads with automatic flow controls and flip-top dust covers. Unit is designed for ADA accessibility.

SPECIFICATIONS

Bowl: 300 series stainless steel
Wrap Around Skirt: 300 series stainless steel
Spray Heads: (2) aerated yellow plastic spray outlets with flip-top dust caps
Valve: ½" NPT female brass, chrome-plated
Activator: Stainless steel push handle
Inlet: ½" NPT female
Performance:
EYEWASH 3.6 gpm @ 30 psi
Compliance: ANSI Z358.1
Universal Emergency Sign Included

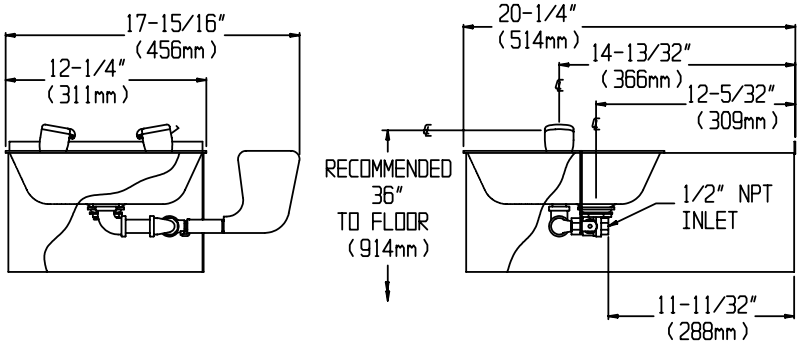

OPTIONS

- ❑ PT P-trap
- ❑ SSBV Stainless steel ball valve
- ❑ ILS In-line strainer

Job Name_____

Location_____

Architect/Engineer _____

Sales Representative _____

Wholesaler _____

Date_____ Model # _____

400 Anchor Mill Road, New Castle, DE 19720 USA
1-800-537-2107 | Fax: 1-800-977-2747
WWW.SPEAKMANCOMPANY.COM

Revision Date
MAR. 2011