# SPEAKMAN®

## SE-546

## EYESAVER® EYEWASH

**DESCRIPTION**

Pedestal mounted emergency eyewash. Supplied with stainless steel bowl, stay-open full flow ball valve; activated by stainless steel trigger bar and/or foot pedal; adjustable volume regulator, and aerated spray outlets with individual adjustments for maximum performance.

**SPECIFICATIONS**

**BOWL**: 300 Series Stainless Steel. (Reference additional SE-505 I,M,O sheet)
**SPRAY HEADS**: (2) Brass, Chrome-Plated, Aerated
**VALVE**: 1/2" NPT Female Brass Chrome-Plated
**ACTIVATOR**: Stainless Steel Trigger Bar and/or Stainless Steel Foot Pedal
**INLET**: 1/2" NPT Female
**PIPE**: 1-1/4" IPS Galvanized Steel
**FLOOR FLANGE**: Brass Casting with (3) 17/32" Dia: Mounting Holes on 9" Dia. Bolt Circle, Spaced 120° Apart
**WASTE**: 1-1/4" NPT Female
**FINISH**: DuraJade™
**Eyewash & Drench Hose**
**Performance**: 3 gpm @ 30 psi
**Compliance**: ANSI Z358.1
**Universal Emergency Sign Included**

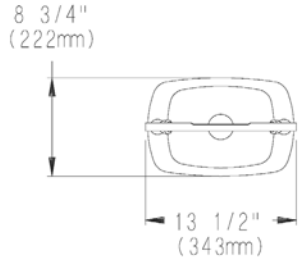


**OPTIONS**

- ❑ FLW Flow switch
- ❑ HS Hand-held spray
- ❑ TP P-Trap
- ❑ ILS In-line strainer
- ❑ HFO Hand & foot operation
- ❑ FPV Anti-freeze protection valve
- ❑ SPV Anti-scald protection valve
- ❑ VPL Vapor proof light

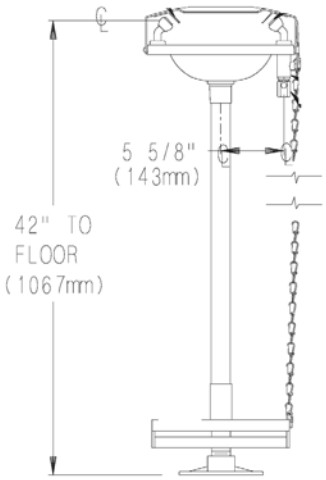


Job Name_____

Location_____

Architect/Engineer _____

Sales Representative _____

Wholesaler _____

Date_____ Model # _____



400 Anchor Mill Road, New Castle, DE 19720 USA
1-800-537-2107 | Fax: 1-800-977-2747
WWW.SPEAKMANCOMPANY.COM

Revision Date
AUG. 2011