SPEAKMAN®

SE-535

EYESAVER® EYEWASH

DESCRIPTION

Pedestal mounted emergency eyewash. Supplied with stainless steel bowl, stay-open full flow ball valve; activated by stainless steel trigger bar; adjustable volume regulator, aerated spray outlets with individual adjustments for maximum performance, and a drench hose activated by a squeeze handle with aerated spray nozzle. All mounted on galvanized steel pipe with drain tee and floor flange.

SPECIFICATIONS

BOWL: 300 Series Stainless Steel
SPRAY HEADS: (2) Brass, Chrome-Plated, Aerated
VALVE: 1/2" NPT Female Brass, Chrome-Plated
ACTIVATOR: Stainless Steel Trigger Bar
INLET: 1/2" NPT Female
PIPE: 1-1/4" IPS Galvanized Steel
FLOOR FLANGE: Brass Casting with (3) 17/32" Dia. Mounting Holes on 9" Dia. Bolt Circle, Spaced 120° Apart
WASTE: 1-1/4" NPT Female
FINISH: Safety Green
DRENCH HOSE:
VALVE: 3/8" NPT Female Brass, Chrome-Plated. Self-Closing Valve
HOSE: 6' Reinforced, 750 PSI Burst Pressure, Integral Hanger for Valve and Dust Cap
Eyewash Performance: 3 gpm @ 30 psi
Drench Hose Performance: 1.6 gpm @ 30 psi
Compliance: ANSI Z358.1
Universal Emergency Sign Included

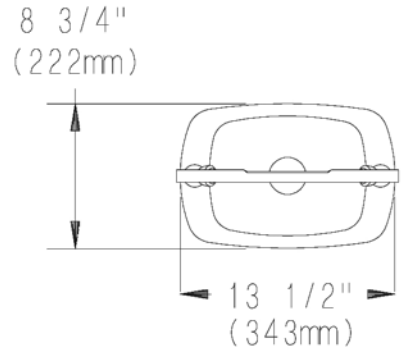

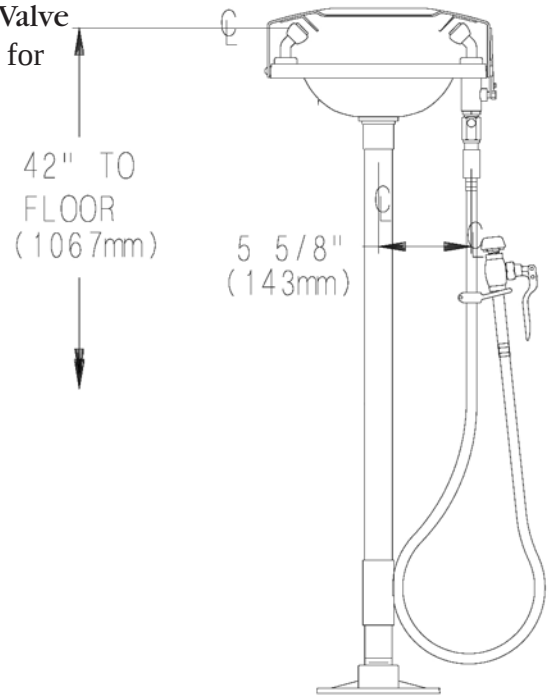

OPTIONS

- ❑ FLW Flow switch
- ❑ ILS In-line strainer
- ❑ FPV Anti-freeze protection valve
- ❑ SPV Anti-scald protection valve
- ❑ VPL Vapor proof light

Job Name _____

Location _____

Architect/Engineer _____

Sales Representative _____

Wholesaler _____

Date _____ Model # _____

400 Anchor Mill Road, New Castle, DE 19720 USA
1-800-537-2107 | Fax: 1-800-977-2747
WWW.SPEAKMANCOMPANY.COM

Revision Date
AUG. 2011