SPEAKMAN®

SE-515

EYESAVER® EYEWASH

DESCRIPTION

Emergency eyewash, for wall mounting, supplied with stainless steel bowl, stay-open full flow ball valve; activated by stainless steel trigger bar or foot pedal; adjustable volume regulator, heavy duty wall mounting plate and aerated spray outlets with individual adjustments for maximum performance.

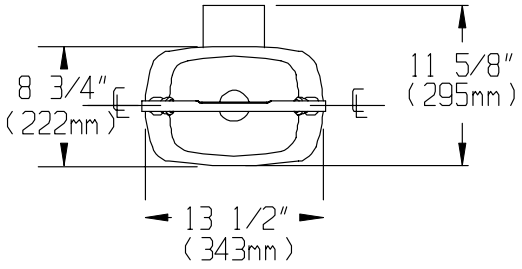

SPECIFICATIONS

Bowl: Stainless Steel
Spray Heads: (2) brass, chrome-plated, aerated
Valve: ½" NPT female brass, chrome-plated
Activator: Stainless steel trigger bar and/or stainless steel foot pedal
Inlet: ½" NPT female
Plate: Cold-rolled steel, painted DuraJade™
Performance: 3.0 gpm @ 30 psi
Compliance: ANSI Z358.1
Universal Emergency Sign Included

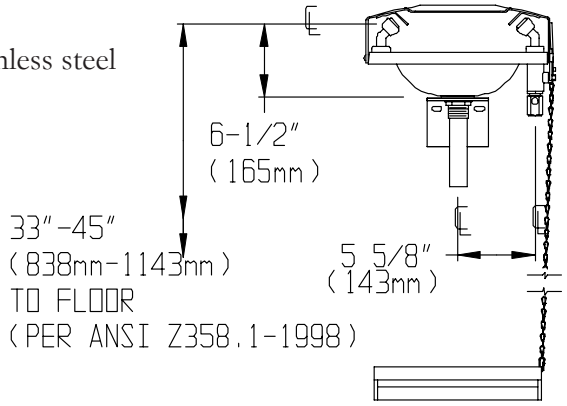

OPTIONS

- ❑ FLW Flow switch
- ❑ FPV Freeze protection valve
- ❑ HS Hand-held spray
- ❑ ILS In-line strainer
- ❑ PT P-trap
- ❑ SPV Scald protection valve
- ❑ SSBV2 ½" stainless steel valve

Job Name_____
Location_____
Architect/Engineer _____
Sales Representative _____
Wholesaler _____
Date_____ Model # _____

379

400 Anchor Mill Road, New Castle, DE 19720 USA
1-800-537-2107 | Fax: 1-800-977-2747
WWW.SPEAKMANCOMPANY.COM

Revision Date
MAR. 2011