SPEAKMAN®

SE-430

EYESAVER® EYE/FACE WASH

DESCRIPTION

Pedestal mounted emergency eye/face wash. Supplied with stainless steel bowl, stay-open full flow ball valve; activated by stainless steel push handle; in-line strainer, and a drench hose activated by squeeze handle with aerated spray nozzle. All mounted on galvanized steel pipe with drain tee and floor flange. Spray pattern is a 9" x 8" (72 sq. in.) curtain of aerated water, easily controlled at any pressure for maximum protection.

SPECIFICATIONS

BOWL: 300 Series Stainless Steel. (Reference additional SE-300 I,M,O sheet)
SPRAY HEADS: (6) Brass, Chrome-Plated, Aerated
VALVE: 1/2" NPT Female Brass, Chrome-Plated
ACTIVATOR: Stainless Steel Push Handle
SHROUDS: Yellow Polypropylene
INLET: 1/2" NPT Female
STRAINER: Brass, Chrome-Plated, In-Line
PIPE: 1-1/4" IPS Galvanized Steel
FLOOR FLANGE: Brass Casting with (3) 17/32 Dia. Mounting Holes on 9" Dia. Bolt Circle, Spaced 120° Apart
WASTE: 1-1/4" NPT Female
FINISH: DuraJade™
DRENCH HOSE:
  VALVE: 3/8" NPT Female Brass, Chrome-Plated
  HOSE: 6' Reinforced, 750 PSI Burst Pressure
    Integral Hanger for Valve and Dust Cap
Eye/Face Wash Performance: 12 gpm @ 30 psi
Drench Hose Performance: 9.55 gpm @ 30 psi
Compliance: ANSI Z358.1
Universal Emergency Sign Included

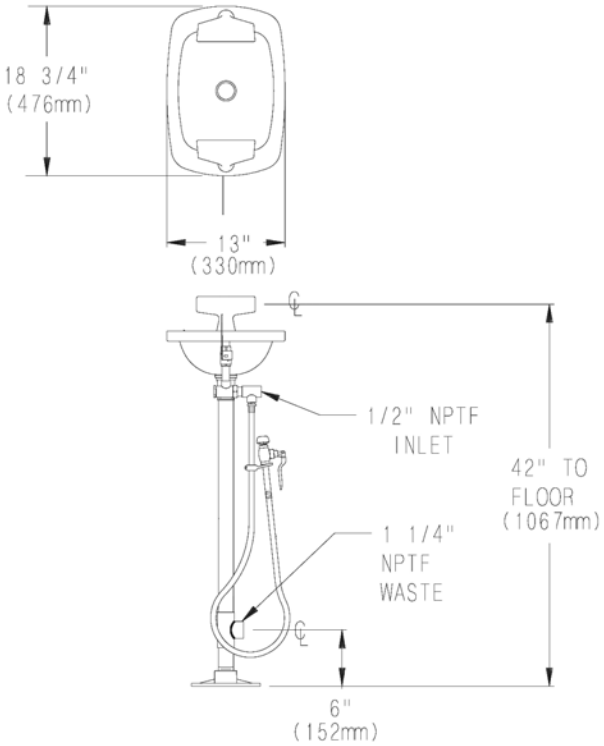

OPTIONS

- ❑ FLW Flow switch
- ❑ HS Hand-held spray
- ❑ PT P Trap
- ❑ FPV Anti-freeze protection valve
- ❑ SPV Anti-scald protection valve
- ❑ VPL Vapor proof light

Job Name_____

Location_____

Architect/Engineer _____

Sales Representative _____

Wholesaler _____

Date_____ Model # _____

400 Anchor Mill Road, New Castle, DE 19720 USA
1-800-537-2107 | Fax: 1-800-977-2747
WWW.SPEAKMANCOMPANY.COM

Revision Date
AUG. 2011