SPEAKMAN®

SE-410

EYESAVER® EYE/FACE WASH

DESCRIPTION

Emergency eye/face wash, for wall mounting, supplied with stainless steel bowl, self-closing valve; activated by chrome-plated brass push handle; and heavy duty wall mounting plate. Spray pattern is a 9" x 8" (72 sq. in.) curtain of aerated water, easily controlled at any pressure for maximum protection.

SPECIFICATIONS

showerhead: 8" dia. cycolac® yellow plastic
BOWL: 300 Series Stainless Steel
SPRAY HEADS: (6) Brass, Chrome-Plated, Aerated
VALVE: 1" NPT Female Brass, Chrome-Plated
ACTIVATOR: Brass, Chrome-Plated Push Handle
SHROUDS: Yellow Polypropylene
INLET: 3/4" NPT Female
PLATE: Cold-Rolled Steel Powder Coating Safety Green
Performance: 9.55 gpm @ 30 psi
Compliance: ANSI Z358.1
Universal Emergency Sign Included

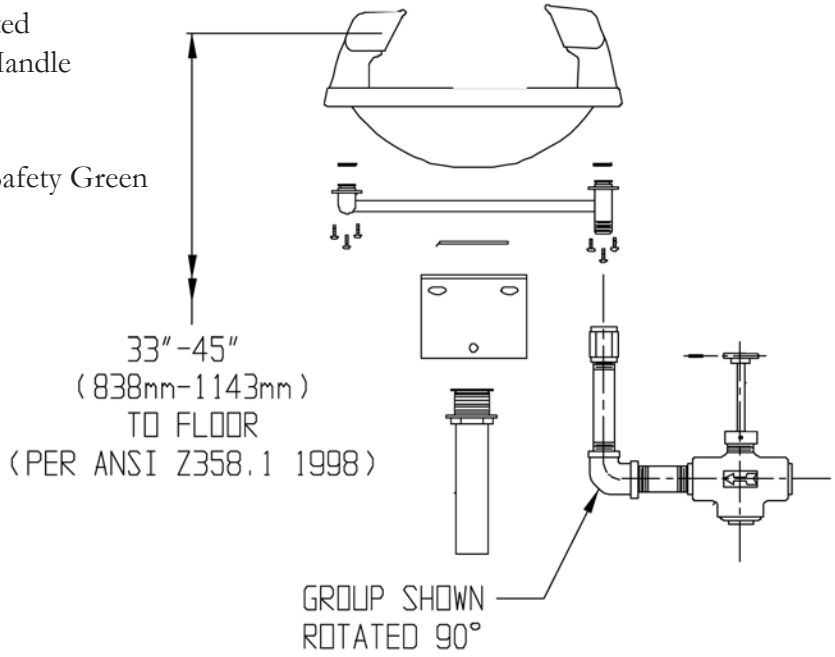

OPTIONS

- ❑ FLW Flow switch
- ❑ HS Hand-held spray
- ❑ PT P Trap
- ❑ FPV Anti-freeze protection valve
- ❑ SPV Anti-scald protection valve
- ❑ VPL Vapor proof light

Job Name_____

Location_____

Architect/Engineer _____

Sales Representative _____

Wholesaler _____

Date_____ Model # _____

400 Anchor Mill Road, New Castle, DE 19720 USA
1-800-537-2107 | Fax: 1-800-977-2747
WWW.SPEAKMANCOMPANY.COM

Revision Date
AUG. 2011