# SPEAKMAN®

## SE-352

## THERMOSTATIC MIXING VALVE

**DESCRIPTION**

Dual element valve with 60 gpm flow capacity supports up to three emergency showers and/or eyewashes. Provides 40 gpm cold water bypass in case of hot water or thermostatic element failure. Complete with check valves and ball valves.

**SPECIFICATIONS**

**Inlet**: 1¼" NPT
**Outlet**: 1¼" NPT
**Cold Water Inlet**: 1¼" NPT Union
**Tempered Water Outlet**: 1¼" NPT Union
**Capacity**: 60 gpm @ 30 psi
**Temp. Range**: 70°-90°
**Set Point**: 85°

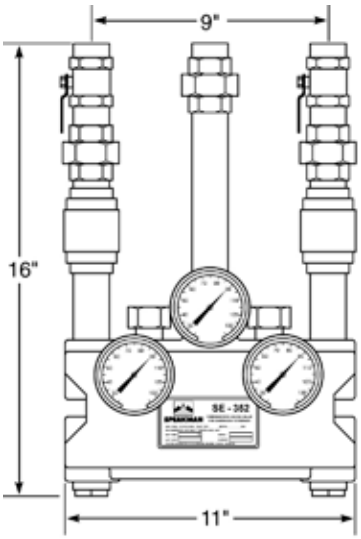


**OPTIONS**

- ❑ Recessed Cabinet
- ❑ Semi-Recessed Cabinet
- ❑ Surface Cabinet
- ❑ Stainless Material
- ❑ Carbon Steel Material

**ASSE 1071 Approved**

Job Name_____

Location_____

Architect/Engineer _____

Sales Representative _____

Wholesaler _____

Date_____ Model # _____

400 Anchor Mill Road, New Castle, DE 19720 USA
1-800-537-2107 | Fax: 1-800-977-2747
WWW.SPEAKMANCOMPANY.COM



Revision Date
MAR. 2011