400 Anchor Mill Rd., New Castle, DE 19720, USA
800-537-2107 | Fax: 800-977-2747
www.speakmancompany.com

SPEAKMAN®

COMMANDER®

SC-4389

Single Lavatory Basin Faucet ♿

GENERAL SPECIFICATION

Polished chrome plated single basin faucet. Brass body with integral spout. Lever handle with hot and cold indexes. Flow control device reduces flow to 2.2 gpm/8.4 lpm. 1/2" NPSM inlet connection. Meets A112.18.1/CSA B125.1 and NSF 61 standards.

❑ **SC-4389**
Single basin faucet.

OPTIONS

SUFFIX	DESCRIPTION
❑ BO	0.5 gpm flow control, vandal-resistant

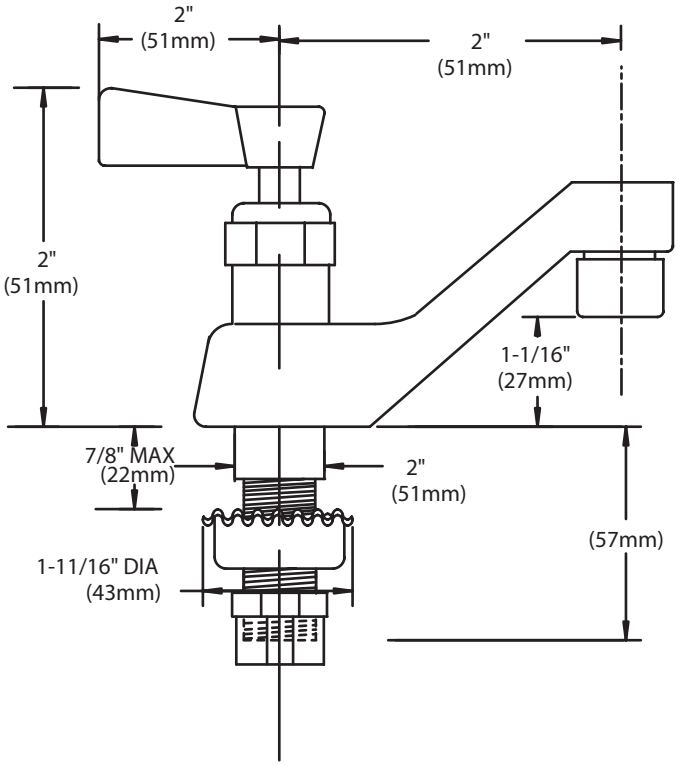

NOTE: Inlet is sized for either coupling or sweat connection. All dimensions are subject to change without notice.

This space for Architect/Engineer approval.

© Copyright, Speakman Company, 2011