400 Anchor Mill Rd., New Castle, DE 19720, USA
800-537-2107 | Fax: 800-977-2747
www.speakmancompany.com

SPEAKMAN®

COMMANDER®

4" Centerset Lavatory Combinations

SC-3061

SC-3061-D75

GENERAL SPECIFICATION

Polished chrome plated Commander 4" centerset lavatory faucet with 1/4 turn ceramic cartridges covered by a 25-year warranty. Accommodates installations up to 7/8" thick. Water conserving flow control reduces flow to 2.2 gpm/8.4 lpm. Meets ASME A112.18.1/CSA B125.1 and NSF61.

Cross Handle Models

Vandal-resistant four arm handles with color-coded indexes.

- ❑ **SC-3061** — Solid brass 1-1/4" pop-up drain
- ❑ **SC-3071** — Strainer drain
- ❑ **SC-3071-LD** — No drain assembly

D75 Cross Handle Models

Diamond 75 four arm handles with color-coded indexes.

- ❑ **SC-3061-D75** — Solid brass 1-1/4" pop-up drain
- ❑ **SC-3071-D75** — Strainer drain
- ❑ **SC-3071-D75-LD** — No drain assembly

OPTIONS

SUFFIX	DESCRIPTION
❑ BO	0.5 gpm flow control, vandal-resistant
❑ CA**	Low lead for CA AB1953 compliance
❑ GB	1.5 gpm flow control, vandal-resistant
❑ LD	Less drain assembly (SC-3061 & SC-3061-D75 only)
❑ LF	2.2 gpm laminar flow control outlet
❑ MI	Metal index for handles
❑ VR	Vandal-resistant outlet device

** The following options are not available with the "CA" option: HS (Hose & Spray), SO, TWI, VB6, VB8, ST, SW, & TMV.

This space for Architect/Engineer approval.

Commander — Registered T.M. Speakman Company
© Copyright, Speakman Company, 2011

SPEAKMAN®

400 Anchor Mill Rd., New Castle, DE 19720, USA
800-537-2107 | Fax: 800-977-2747
www.speakmancompany.com

Rough-Ins

SC-3061

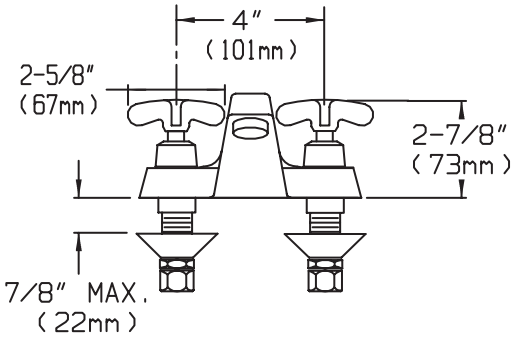

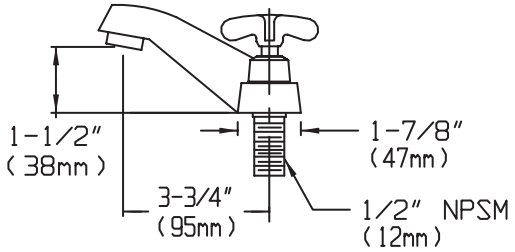

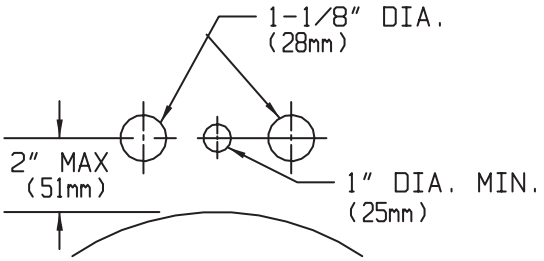

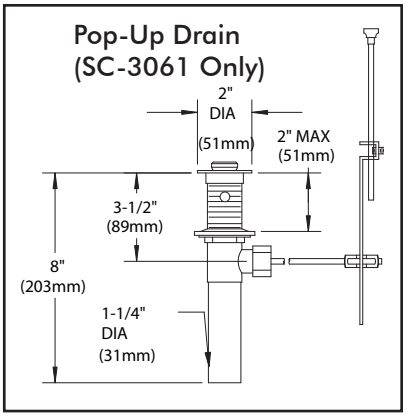

SC-3061-D75

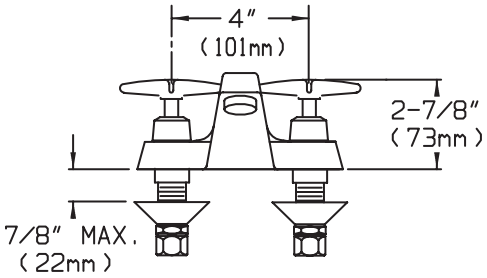

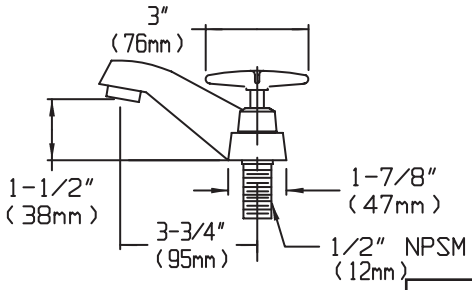

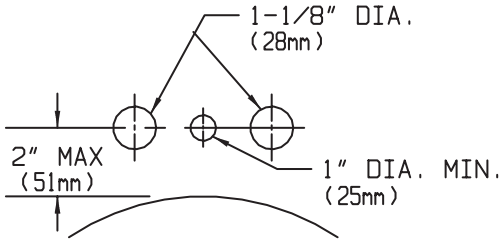

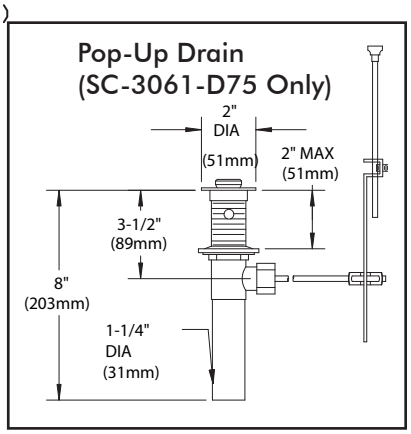

NOTE: All dimensions are in inches (millimeters) unless otherwise specified and are subject to change without notice. Lavatory inlets are sized for either coupling or sweat connections. Unless otherwise specified, all inlets are 1/2" NPSM.