400 Anchor Mill Rd., New Castle, DE 19720, USA
800-537-2107 | Fax: 800-977-2747
www.speakmancompany.com

COMMANDER®

SC-1131-AF

SC-1151-AF

SC-1191

Shower & Bath

GENERAL SPECIFICATION

Commander concealed valve combinations. 1/4 turn ceramic cartridges covered by 25-year warranty. Chrome plated patented vandal-resistant four-arm handles with color-coded indexes. Brass bypass bodies with 1/2" pipe plugs. Integral stops. Reversible couplings for 1/2" sweat or NPTF inlet.

❑ SC-1131-AF

S-2272-E2 showerhead with flow control device reduces flow to 2.0 gpm/7.57 lpm maximum to meet existing ASME A112.18.1/CSA B125.1 standard. S-2500 shower arm and wall flange.

❑ SC-1151-AF

S-2272-E2 showerhead with flow control device reduces flow to 2.0 gpm/7.57 lpm lpm maximum to meet existing ASME A112.18.1/CSA B125.1 standard. S-2500 shower arm and wall flange. S-1556 diverter tub spout.

❑ SC-1191

Bath filler with S-1554 tub spout.

OPTIONS

SUFFIX	DESCRIPTION
❑ D75	Diamond 75 escutcheons and handles

OPTIONS FOR SC-1131-AF & SC-1151-AF ONLY

SUFFIX	DESCRIPTION
❑ 1	S-2251 showerhead
❑ 2	S-2252 showerhead
❑ 2VR	S-2252 vandal-resistant showerhead
❑ 3	S-2253 showerhead
❑ 6	S-2288 showerhead
❑ 9	S-2292 showerhead

OPTIONS

SUFFIX	DESCRIPTION
❑ CO	Center only with trim

This space for Architect/Engineer approval.

Commander — Registered T.M. Speakman Company
© Copyright, Speakman Company, 2011

400 Anchor Mill Rd., New Castle, DE 19720, USA
800-537-2107 | Fax: 800-977-2747
www.speakmancompany.com

Rough-Ins

SC-1131-AF

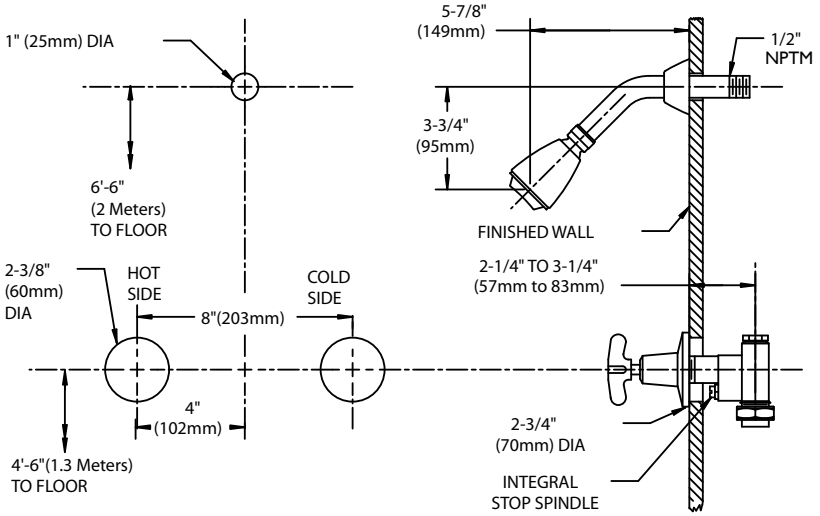

SC-1151-AF

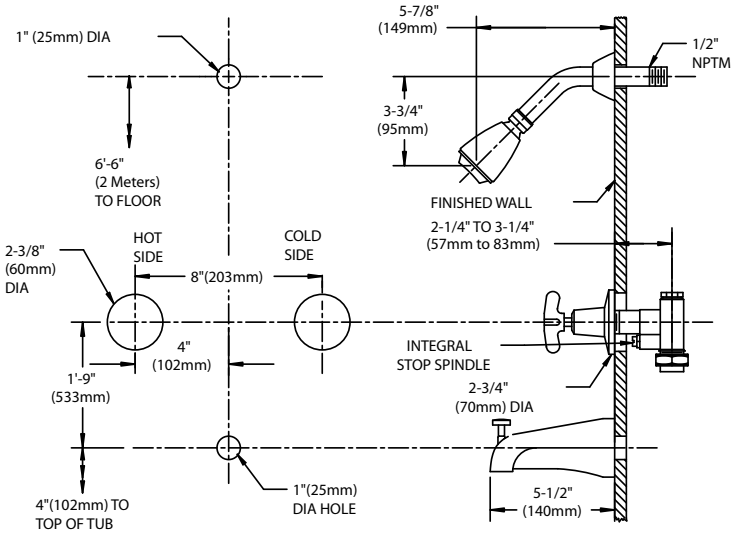

SC-1191

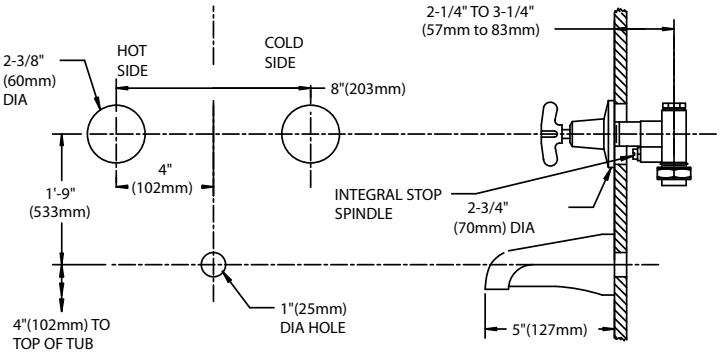

NOTE: Unless otherwise specified, all inlets and outlets are 1/2" NPTF. Tub outlet is 3/4 NPTF. Unless otherwise specified, all dimensions are in inches and are subject to change without notice.