SPEAKMAN ICON™

8″ Widespread Faucet SB-1421

SPECIFICATION

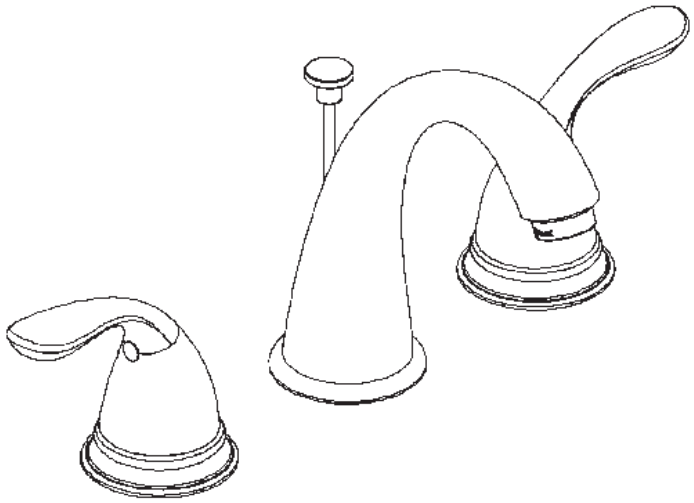

FEATURES:

- Lead-free brass construction
- ¼ turn ceramic cartridge
- 1.5 gpm flow rate
- Classic style
- Includes drain assembly
- Quick connect fittings

COMPLIANCE:

- Certified to ASME A112.18.1/CSA B125.1 and NSF61 standards
- CA AB 1953 certified

AVAILABLE FINISHES:

ADD SUFFIX TO MODEL #

- Polished Chrome (standard)

WARRANTY:

- 1 year limited

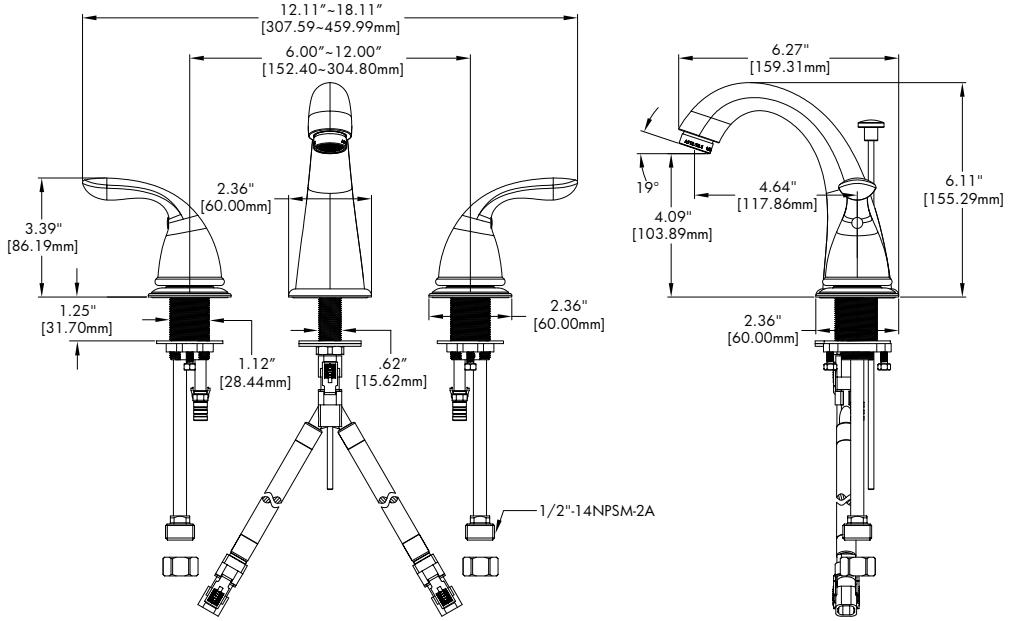

NOTE: 1. All dimensions are in inches (millimeters) unless otherwise specified and are subject to change without notice.

THIS SPACE FOR ARCHITECT/ENGINEER APPROVAL.

SPEAKMAN®

400 ANCHOR MILL ROAD | NEW CASTLE, DE 19720
P: 800-537-2107 | F: 800-977-2747
WWW.SPEAKMANCOMPANY.COM

REVISION DATE: SEPT. 2011