SPEAKMAN ICON™

Accessories SA-1401

SPECIFICATION

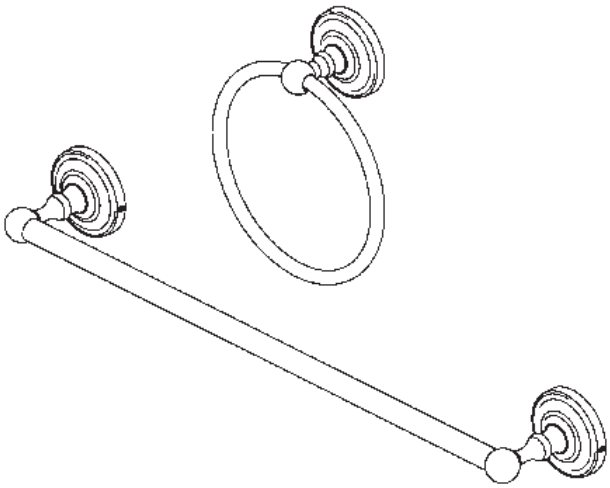

FEATURES:

- 18″ towel bar(1)
- Towel ring(1)
- Metal construction

AVAILABLE FINISHES:

ADD SUFFIX TO MODEL #

- Polished Chrome (standard)

WARRANTY:

- 1 year limited

Towel Ring

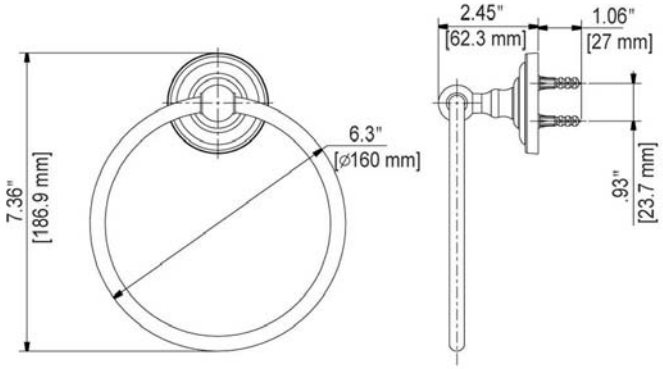

Towel Bar

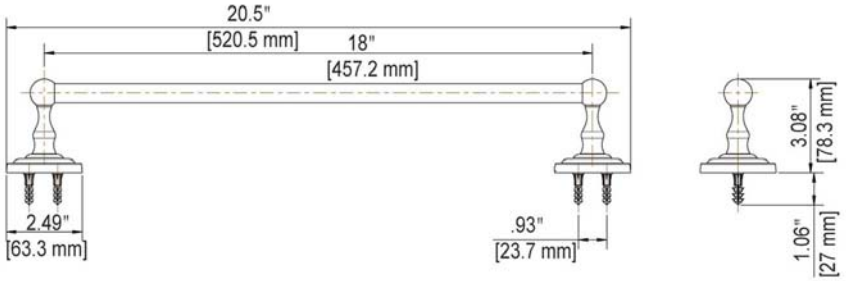

NOTE: 1. All dimensions are in inches (millimeters) unless otherwise specified and are subject to change without notice.

THIS SPACE FOR ARCHITECT/ENGINEER APPROVAL.

SPEAKMAN®
400 ANCHOR MILL ROAD | NEW CASTLE, DE 19720
P: 800-537-2107 | F: 800-977-2747
WWW.SPEAKMANCOMPANY.COM

REVISION DATE: SEPT. 2011