400 Anchor Mill Rd., New Castle, DE 19720, USA
800-537-2107 | Fax: 800-977-2747
www.speakmancompany.com

SPEAKMAN®

SENSORFLO®

S-9200
S-9201

S-9210
S-9211

S-9220
S-9221

AC Powered Lavatory Faucet

GENERAL SPECIFICATION

Polished chrome plated. Brass housing and brass spout. Solenoid with built-in filter. UL/CSA approved transformer 120 VAC to 12 VDC with waterproof connectors. 120-second time out feature. Water conserving vandal-resistant flow control reduces flow to 2.2 gpm/8.4 lpm. To Meet existing ASME A112.18.1/CSA B125.1 standard. NOTE: Stainless steel flexible supply hose(s), 3/8" compression, to supply stop(s) not included, see options below.

❑ **S-9200**
Single basin gooseneck faucet.

❑ **S-9201**
Single basin gooseneck faucet, under counter mechanical mixer with built-in backflow check valves.

❑ **S-9210**
Gooseneck faucet with 4" deck plate.

❑ **S-9211**
Gooseneck faucet with 4" deck plate, under counter mechanical mixer with built-in backflow check valves.

❑ **S-9220**
Gooseneck faucet with 8" deck plate.

❑ **S-9221**
Gooseneck faucet with 8" deck plate, under counter mechanical mixer with built-in backflow check valves.

OPTIONS

SUFFIX	DESCRIPTION
❑ BO	0.5 gpm flow control, vandal-resistant
❑ CA**	No lead for CA AB1953 compliance
❑ FC	2.06 gpm laminar flow control, plain end spout
❑ GB	1.5 gpm flow control, vandal-resistant
❑ HS	Two (2) stainless steel flexible supply hoses to supply stops
❑ HTS	One (1) stainless steel hose for tempered water systems (S-9200, S-9210, & S-9220 only)
❑ LF	2.2 gpm laminar flow control outlet
❑ LT	Less transformer
❑ TMV	Under counter thermostatic mixing valve (S-9200, S-9210, & S-9220 only)

** The following options are not available with the "CA" option: HS (Hose & Spray), SO, TWI, VB6, VB8, ST, SW, & TMV.

This space for Architect/Engineer approval.

Sensorflo— Registered T.M. Speakman Company
© Copyright, Speakman Company, 2011

400 Anchor Mill Rd., New Castle, DE 19720, USA
800-537-2107 | Fax: 800-977-2747
www.speakmancompany.com

Rough-Ins

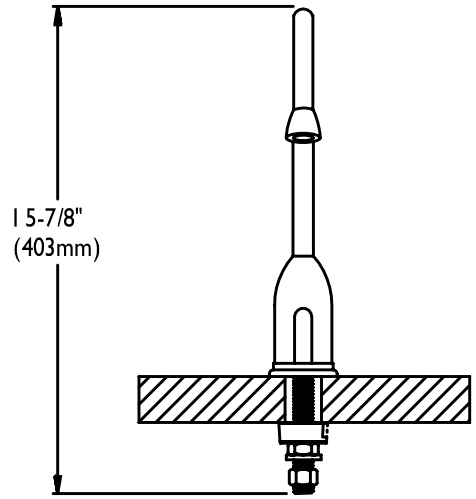

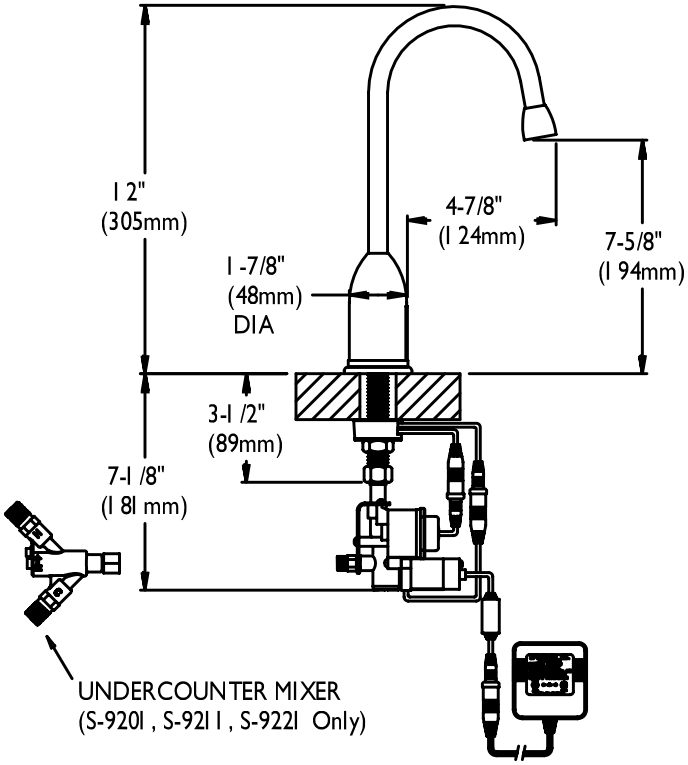

S-9200
S-9201

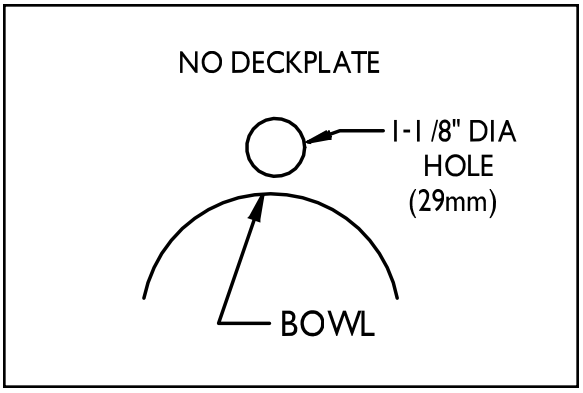

S-9210
S-9211

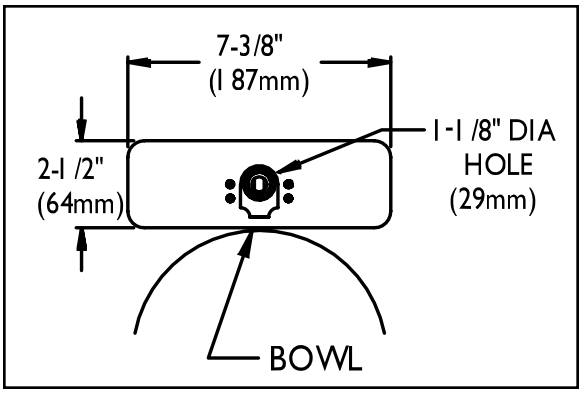

S-9220
S-9221

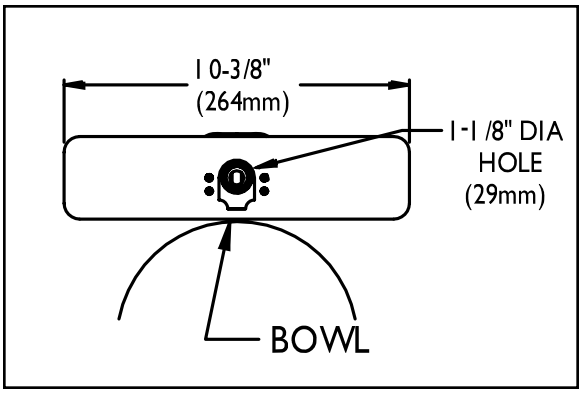

NOTE: Unless otherwise specified, all inlets and outlets are 1/2" NPTF. Unless otherwise specified, all dimensions are in inches and are subject to change.