SPEAKMAN COMPANY

WIDESPREAD LAVATORY AND SINGLE WASH-UP METERING FAUCET INSTALLATION INSTRUCTIONS

WARNING

IT IS ABSOLUTELY ESSENTIAL THAT THESE INSTALLATION AND ADJUSTING INSTRUCTIONS BE FOLLOWED. IF THEY ARE NOT, THE VALVE MAY NOT WORK PROPERLY AND THE PRODUCT WARRANTY WILL BE VOIDED. SHOULD SPEAKMAN COMPANY OR ITS AGENTS BE REQUIRED TO SERVICE THE PRODUCT, A SERVICE CHARGE MAY BE MADE TO COVER THESE COSTS.

OUR RECOMMENDATION

This metering faucet is not an ordinary plumbing product. It is designed to provide a variety of flow times which are dependent on temperature and pressure. The mechanism of the valving is manufactured to very close tolerances, therefore care in handling and flushing the line(s) is required. It is recommended that all metering valves be installed with their flush plugs in place and outlet devices removed. After thoroughly flushing the line(s) of the entire system, the metering mounting(s) and outlet device(s) may be carefully assembled to the faucet. Following these simple overall instructions will greatly enhance the successful installation of this metering faucet.

INSTALLATION INSTRUCTIONS

WIDESPREAD LAVATORY ONLY

NOTE: Shut off water supplies. Supply lines must have compression type ends. Refer to other side of sheet.

1) Screw locknuts down on body assemblies. Place cup washers onto bodies. Apply sealant around base underside of escutcheons. Working from below the sink, insert body assemblies through holes in sink or counter top. From above sink, screw escutcheons onto bodies flush with top of bodies. From under sink, screw locknuts up hand tight. Position bodies so that outlets are accessible and using basin wrench tighten locknuts while holding bodies in place. Wipe off excess sealant from around escutcheons.
2) Apply sealant around base underside of nozzle assembly. Position nozzle in hole of sink or countertop and push down firmly to seal. From under sink, slip channel washer, then spacer onto shank of nozzle. Screw shank nut on and tighten with basin wrench. Wipe off excess sealant from around nozzle base.
3) Screw swivel assembly onto end of nozzle shank and tighten. NOTE: DO NOT OVER TIGHTEN.
4) Apply pipe sealant to male threads of flex hoses. Screw into outlets of bodies and tighten. Screw female ends onto swivel assembly and tighten.
5) Connect water supply lines to inlets of bodies and tighten coupling nuts with wrench.

SINGLE WASH-UP ONLY

NOTE: Shut off water supply. Supply line must have 1/2 male tapered pipe threads. Refer to other side of sheet.

1) Install supply pipe per roughing-in diagram. Apply pipe sealant to threads of supply pipe. Slip wall flange over pipe and screw body assembly onto supply pipe. Tighten and position body with strap wrench. Make sure wall flange is tight against finished wall. This can be done by supporting supply pipe behind wall.

WIDESPREAD LAVATORY AND SINGLE WASH-UP

1) Make sure flush plug(s) is secure in the faucet and outlet device is removed. Flush line(s) by turning on water supply(s) to faucet. Flush line(s) until water supply is clean of all foreign matter. Turn off water supply(s) and remove flush plug(s).
2) Before install metering mounting(s), remove as much of the standing water in the faucet as possible. This prevents a detrimental pressure build-up that can occur during assembly. Guide mounting(s) into faucet making sure not to nick o-ring #(30). If excessive resistance is felt, relieve the pressure by pushing down on the adjusting piece (#5) or button (#10). Screw mounting(s) into faucet. Wrench tighten.
3) Assemble outlet device to outlet of faucet.
4) Since the palm button mounting is fully assembled, ignore this section. For the EASY PUSH® mounting, loosen the two set screws (#25) in the hub(#8) using an allen wrench. Insert metering handle assembly into the hub. NOTE: BE SURE THE BOTTOM PART OF YOKE (#14) IS IN CONTACT WITH THE TOP OF THE HUB. Tighten the two set screws in the hub. If applicable, repeat for other side of faucet.
5) Turn water supply(s) on and check for leaks. See "MOUNTING CYCLE TIME ADJUSTMENT INSTRUCTION" on second sheet.

SPEAKMAN METERING FAUCETS PARTS LIST & ROUGHING-IN

WIDESPREAD LAVATORY

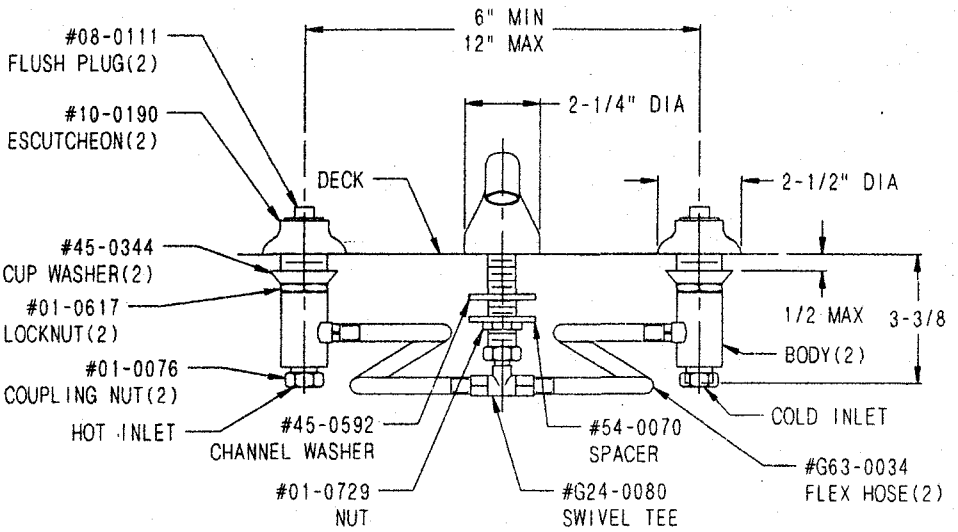

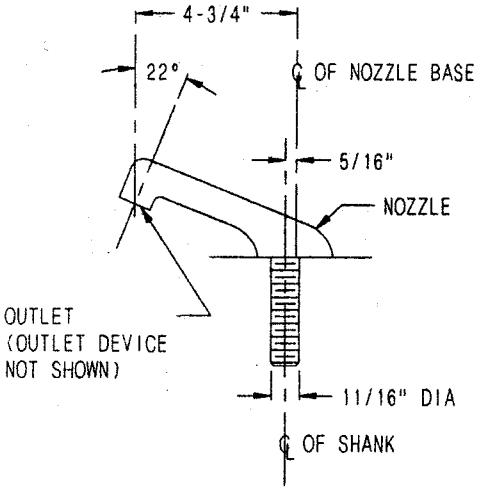

SIDE VIEW OF NOZZLE ASSEMBLY

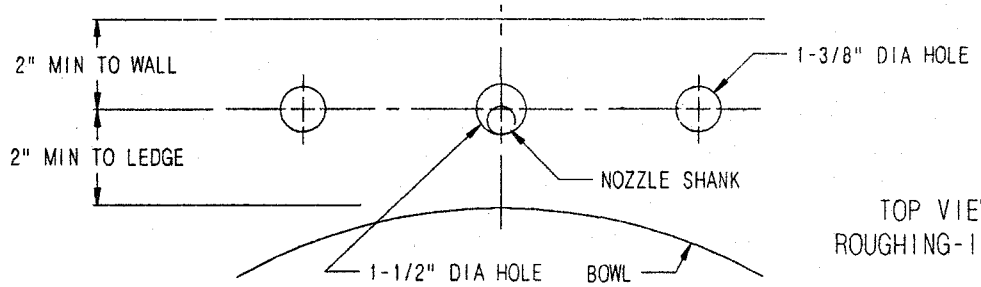

TOP VIEW OF ROUGHING-IN HOLES

SINGLE WASH-UP

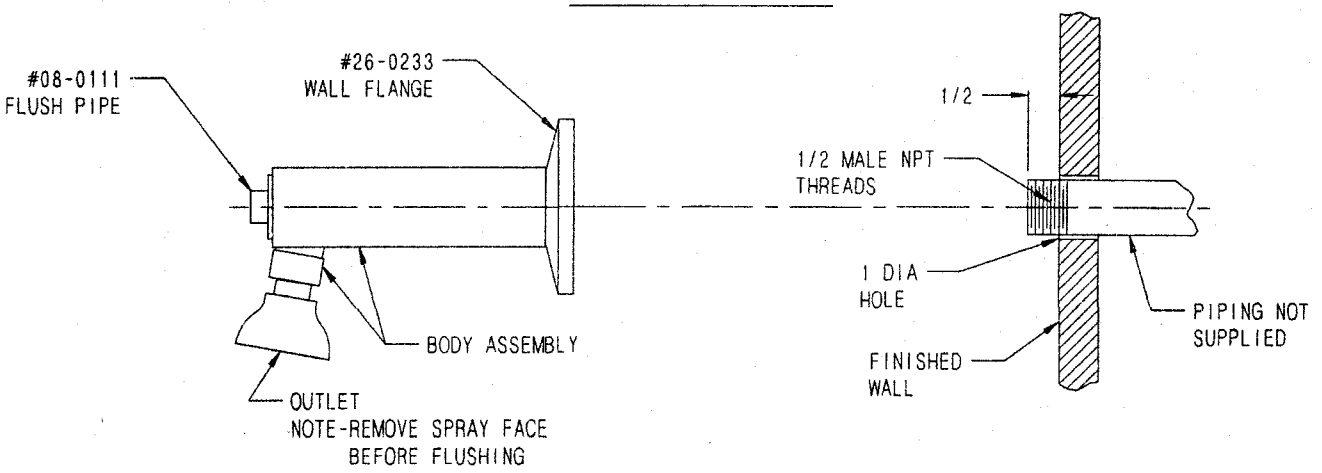

SPEAKMAN

PO Box 191 Wilmington, DE 19899 Phone: 800-537-2107 Fax: 800-977-2747

Visit us on the web at www.speakmancompany.com

#92-0065 REV 12/06