SPEAKMAN COMPANY

4" CENTERSET AND SINGLE METERING LAVATORY FAUCET INSTALLATION INSTRUCTIONS

WARNING

IT IS ABSOLUTELY ESSENTIAL THAT THESE INSTALLATION AND ADJUSTING INSTRUCTIONS BE FOLLOWED. IF THEY ARE NOT, THE VALVE MAY NOT WORK PROPERLY AND THE PRODUCT WARRANTY WILL BE VOIDED. SHOULD SPEAKMAN COMPANY OR IT'S AGENTS BE REQUIRED TO SERVICE THE PRODUCT, A SERVICE CHARGE MAY BE MADE TO COVER THE COSTS.

OUR RECOMMENDATION

This metering faucet is not an ordinary plumbing product. It is designed to provide a variety of flow times which are dependent on temperature and pressure. The mechanism of the valving is manufactured to very close tolerances, therefore care in handling and flushing the line(s) is required. It is recommended that all metering valves be installed with their flush plugs in place and outlet devices removed. After thoroughly flushing the line(s) of the entire system, the metering mounting(s) and outlet device(s) may be carefully assembled to the faucet. Following these simple overall instructions will greatly enhance the successful installation of this metering faucet.

INSTALLATION INSTRUCTIONS

NOTE: Shut off water supply(s). Supply line(s) must have compression type end(s). Refer to other side of sheet.

1) Apply sealant around base/recess area (underside) of faucet.

2) Place faucet in position on sink or countertop and push down firmly to seal. Working from under the bowl, slip cup washer(s) onto shank(s) and screw locknut(s) up hand tight. Using a basin wrench tighten locknut(s). NOTE: 50 FT. LBS.. MAX. Wipe off excess sealant from around faucet base.

3) Connect water supply line(s) to inlet shank(s) and tighten coupling nut(s) with wrench.

4) Make sure flush plug(s) is secure in the faucet and outlet device is removed. Flush line(s) by turning on water supply(s) to faucet. Flush line(s) until water supply is clean of all foreign matter. Turn off water supply(s) and remove flush plug(s).

5) Before install metering mounting(s), remove as much of the standing water in the faucet as possible. This prevents a detrimental pressure build-up that can occur during assembly. Guide mounting(s) into faucet making sure not to nick o-ring #(30). If excessive resistance is felt, relieve the pressure by pushing down on the adjusting piece (#5) or button (#10). Screw mounting(s) into faucet. Wrench tighten.

6) Assemble outlet device to outlet of faucet.

7) Since the palm button mounting is fully assembled, ignore this section. For the EASY PUSH® model, loosen the two set screws (#25) in the hub(#8) using an allen wrench. Insert metering handle assembly into the hub. NOTE: BE SURE THE BOTTOM PART OF YOKE (#14) IS IN CONTACT WITH THE TOP OF THE HUB. Tighten the two set screws in the hub. If applicable, repeat for other side of faucet.

8) Turn water supply(s) on and check for leaks. See "MOUNTING CYCLE TIME ADJUSTMENT INSTRUCTION" on second sheet.

SPEAKMAN METERING FAUCETS PARTS LIST & ROUGHING-IN

4" CENTERSET METERING COMBINATION

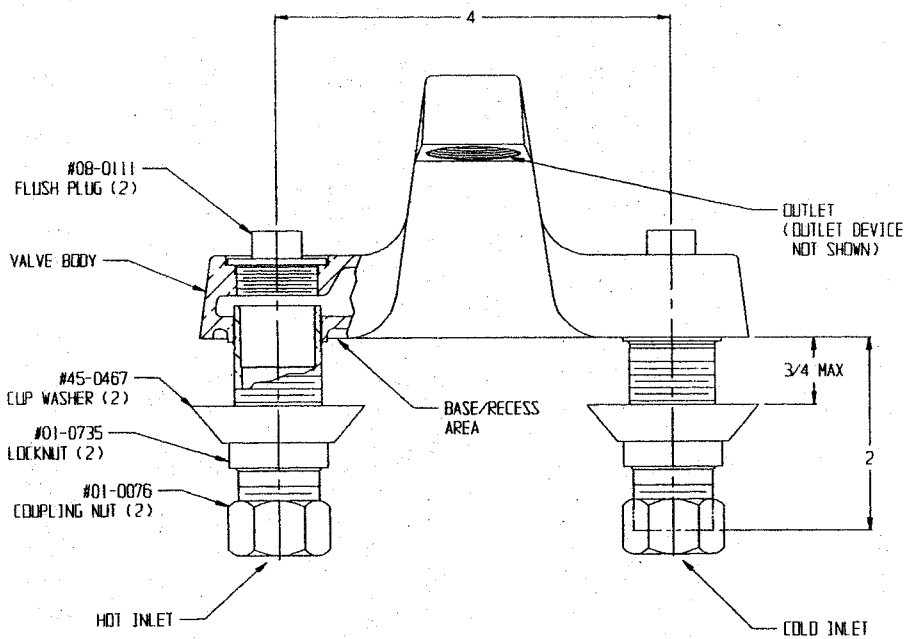

SINGLE METERING LAVATORY FAUCET

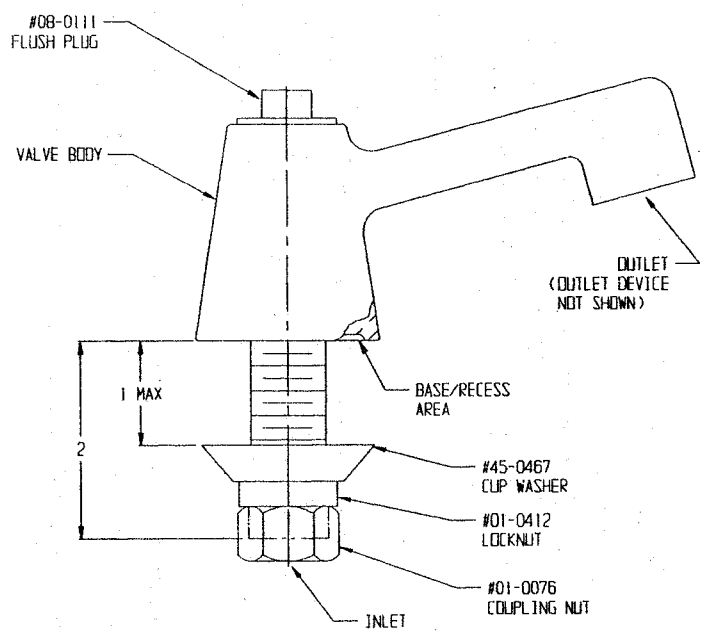

92-0064
1 / 07

SPEAKMAN

PO Box 191 Wilmington, DE 19899 Phone: 800-537-2107 Fax: 800-977-2747

Visit us on the web at www.speakmancompany.com