P.O. Box 191, Wilmington, DE 19899-0191 USA
1-800-537-2107 Fax: 1-800-977-2747
www.speakmancompany.com

S-4110

Drinking Faucet

❑ **S-4110**
Chrome plated self-closing drinking faucet. Lever operated solid brass valve. Adjustable restrictor limits the flow through the faucet. Meets ADA, ASME, A112.18.1/CSA B125.1 and NSF 61.

S-4125

Easy-Push metering faucet cycle times will vary according to local water temperatures and pressure.

EASY-PUSH®
Metering Lavatory Fitting

❑ **S-4125/Plain**
Polished chrome plated all brass metering wash-up fitting with rigid shank. Angled integral brass spout mesasures 3-5/8" from center of inlet to center of outlet. Easy-Push handle with brass yokes. Concealed cycle adjustment without shutting off water supply. Non-hammering operating unit protected by monel mesh screens. Vandal-resistant standard. Water conserving device reduces flow to .25 gpc/.946 lpc. Meets A112.18.1/CSA B125.1.

❑ **S-4126/HOT**

❑ **S-4127/COLD**

OPTIONS FOR S-4125, S-4126 & S-4127 ONLY

SUFFIX	DESCRIPTION
❑ BO	0.5 gpm flow control, vandal-resistant
❑ GB	1.5 gpm flow control, vandal-resistant
❑ HS	Two (2) stainless steel supply hoses (with UCM only)
❑ LF	2.2 gpm laminar flow control outlet
❑ UCM	Under-counter mechanical mixer
❑ 4DP	4" deck plate

This space for Architect/Engineer approval.

Easy-Push — Registered T.M. Speakman Company
© Copyright, Speakman Company, 2006

P.O. Box 191, Wilmington, DE 19899-0191 USA
1-800-537-2107 Fax: 1-800-977-2747
www.speakmancompany.com

Rough-Ins

S-4110

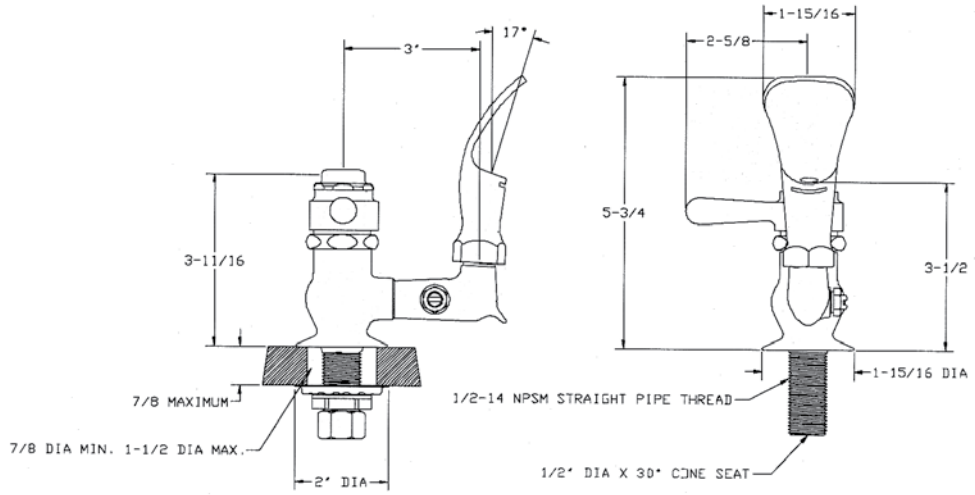

S-4125
S-4126
S-4127

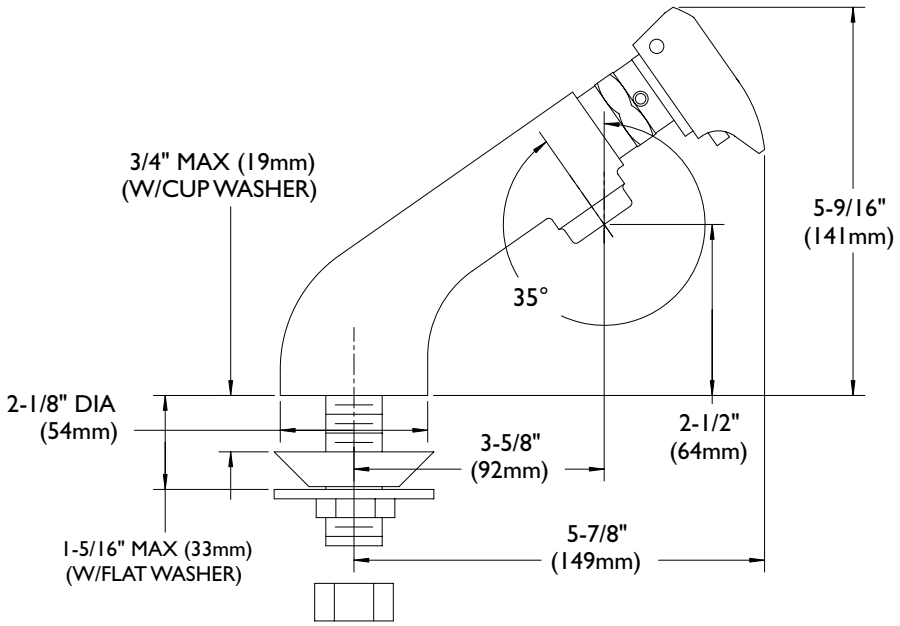

NOTE: All dimensions are in inches (millimeters) unless otherwise specified and are subject to change without notice. Inlet is sized for either coupling or sweat connections. Unless otherwise specified, inlet is 1/2" NPSM.