SPEAKMAN COMPANY

S-3551 Installation, Maintenance & Operation Instructions

SINGLE LEVER 4” FAUCET

DESCRIPTION

Speakman polished chrome plated, NSF complaint, vandal-resistant 4” centerset single lever faucet. All metal shell and belly plate. Long-life ceramic cartridge. Adjustable temperature limit and flow control. 1-¼” pop-up drain. Water conserving aerator reduces flow to 2.2 gpm/ 8.4 lpm to meet existing ANSI A112.18.1m Standard. Copper tube inlets with ½” NPSM male threads. Meets CSA standard.

SPECIFICATIONS

SUPPLY: 3/8” O.D. TUBE
FLOW RATE: 2.2 GPM/ 8.4 LPM VARIABLE
SHIPPING WEIGHT: XXX LBS.

OPTIONS

◊ BOCA- Vandal-Resistant 0.5 gpm Flow Regulator	◊ LF- Laminar Flow Outlet

INSTALLATION

Shut off hot and cold water supplies. Place faucet base plate on faucet and position on lavatory sink. From underneath the sink position bracket on mounting studs, attach and tighten hex nuts. Install plastic nut and sealing gasket onto supply tubes. Connect left inlet tube to hot water supply and right inlet tube to cold water supply.
WARNING: Do not kink the copper tubes when connecting to water supplies.

CAUTION: Do not apply solder or braze to inlet tubes. Excessive heat may damage components of the Speakman faucet.

OPERATION

Simply lift handle up rotating to the desired temperature.

MAINTENANCE (CARE and CLEANING)

Valve is washerless and requires no routine maintenance.
The gleaming finish of your SPEAKMAN Single Lever lavatory faucet can be cleaned by using mild soap and warm water. Dry immediately with a soft, clean cloth for best results.

REPAIR / REPLACEMENT PARTS

ITEM NO.	PART OR GROUP NUMBER	DESCRIPTION
1	RPG04-0363	LEVER HANDLE KIT CONSISTING OF: LEVER HANDLE, SET SCREW, AND HOT/COLD INDICATOR BUTTON
NS	RPG05-0701	CARTRIDGE KIT CONSISTING OF: PACKING NUT AND CARTRIDGE ASSEMBLY
2	RPG05-0732	VR 2.2 gpm AERATOR OUTLET W/ KEY
3	RPG05-0702	HARDWARE KIT CONSISTING OF: BASE PLATE, #10-24 SINK SCREW (2) MOUNTING BRACKET (2), ¼” STUD (2) HEX NUT (2), SEALING GASKET (2), FLARE NUT (2), AND INSTRUCTION SHEET

ROUGH-IN MEASUREMENTS

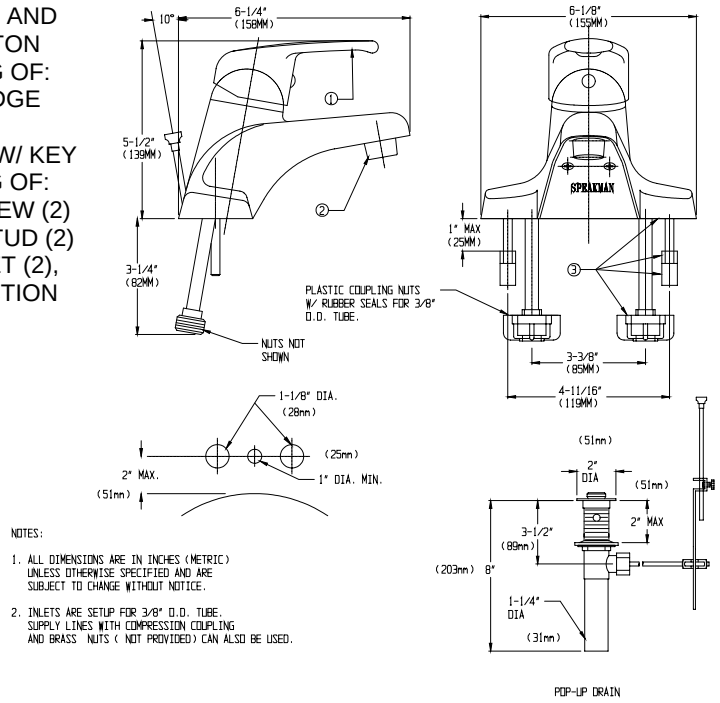

SPEAKMAN
The Quality Leader since 1869
P.O. Box 191, Wilmington, DE 19899-0191
USA 1-800/537-2107, FAX: 1-800/977-2747

04/02
92-2118 Rev-1